REV	DATE	DESCRIPTION
00	25/05/2020	INITIAL REVISION

NOTES:

1. (⊥) ALL VERTICAL SUPPORTS ARE PERPENDICULAR.
2. ⏥ FLATNESS OF .5MM IS APPLIED BY DEFAULT.
3. ◺ WELD BEAD OF 2MM RADIUS IS FOLLOWED.
4. ▽▽ SURFACE FINISH MEDIUM TO SMOOTH IS USED.
5. ALL TUBES ARE AS PER APL APOLLO STANDARD. CHANGES MAY EFFECT THE LOAD CAPACITY.
6. ALL HORIZONTAL AND VERTICAL TUBES ARE PERPENDICULAR TO EACH OTHER WITH ±1 DEG.
7. FINE WELDNG IS REQUIRED AS PER MENTIONED DETAILS AND FINISHING.
8. HIGHER CURRENT WELDING MAY AFFECT THE BRITTLENESS OF MATERIAL WHICH LATER MAY RAISE TO WEAKENING OF STRUCTURE.
9. FABRICATORS ARE ALLOWED TO USE FITTINGS/FRAMES/SUPPORTS AS NEEDED AND THE SAME MUST BE COMMUNICATED BACK TO ENGINEERING TEAM.
10. LENGTH OF ALL LONGITUDINAL FRAMES ARE FOR REFERENCE ONLY AND SUBJECTED TO CHANGE PER REQUIREMENT.

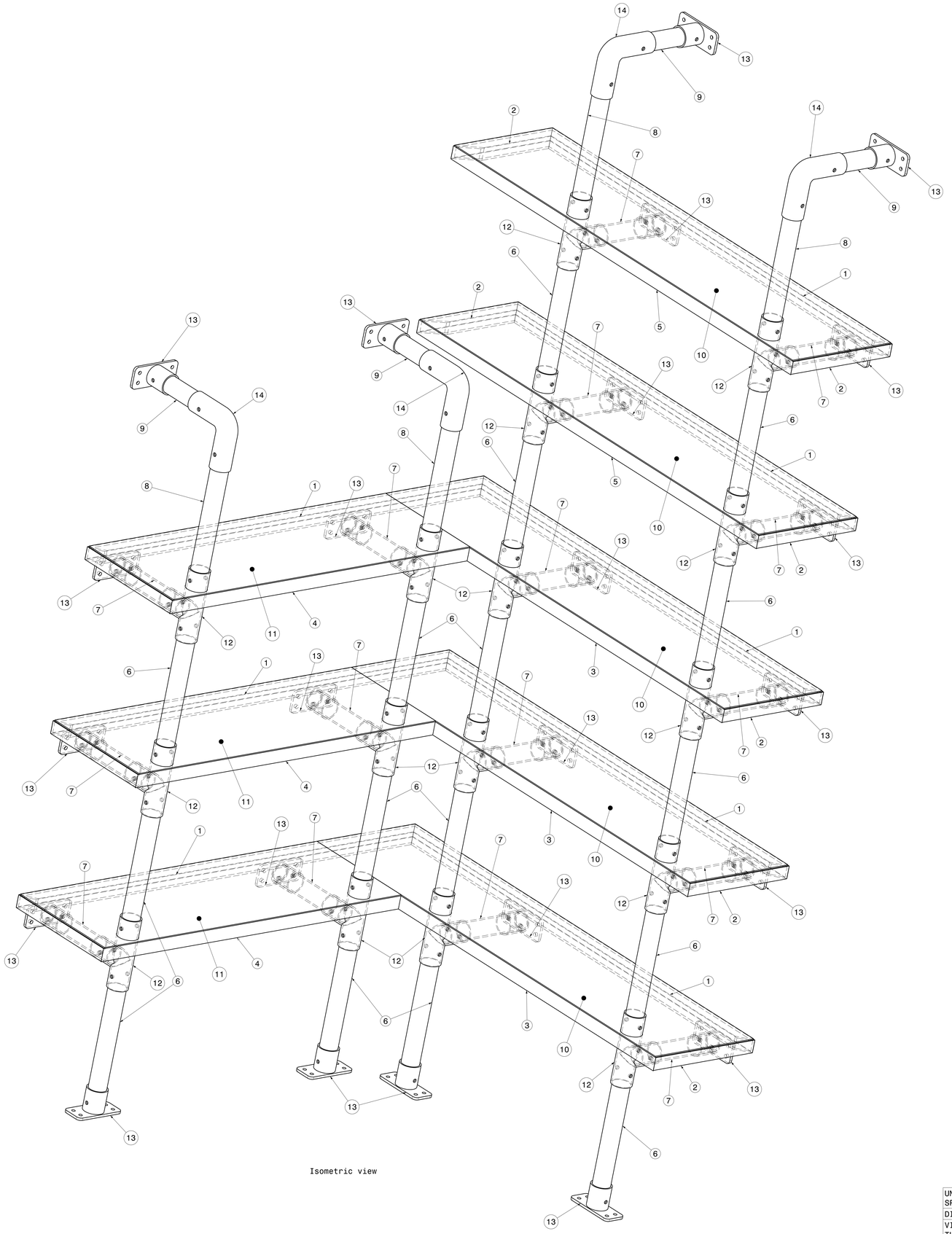

Isometric view

ITEM NO.	PART NUMBER	DESCRIPTION	QTY.	Wt(Kg)/Each
14	L Joint-BOP		4	0.8
13	Connector Base-BOP		24	0.5
12	T joint-BOP		16	0.8
11	Plate1 -BOP	897.5 X 297.5, T=2.5	3	5.2
10	Plate -BOP	1195 X 297.5 T=2.5	5	6.9
9	round_tube Shelf Frame 9	42.5 X 3.2 X 205	4	0.6
8	round_tube Shelf Frame 8	42.5 X 3.2 X 375	4	1.2
7	round_tube Shelf Frame 7	42.5 X 3.2 X 220	16	0.7
6	round_tube Shelf Frame 6	42.5 X 3.2 X 434	16	1.3
5	Rect Tube Shelf Frame 5	66 X 33 X 3.2 X 1200	2	5.2
4	Rect Tube Shelf Frame 4	66 X 33 X 3.2 X 900	3	3.9
3	Rect Tube Shelf Frame 3	66 X 33 X 3.2 X 1168	3	5.2
2	Sq Tube Shelf Frame 2	32 X 32 X 3.2 X 300	10	0.7
1	Sq Tube Shelf Frame 1	32 X 32 X 3.2 X 1200	8	3.4

This drawing is our property. It can't be reproduced or communicated without our written agreement.

APL APOLLO TUBES LTD.

DRAWING TITLE: SHELF

DRAWN BY: SB	DATE: 25/05/2020	
CHECKED BY: P2P Analysis & Solutions	DATE: 25/05/2020	
DESIGNED BY: P2P Analysis & Solutions	DATE: 25/05/2020	

UNLESS OTHERWISE SPECIFIED
DIMENSION ARE IN MM
VIEWS: THIRD ANGLE PROJECTION

SIZE: A0 | DRAWING NUMBER: P2P_SHELF | REV: 00

SCALE: As Indicated | WEIGHT(kg): 0kg | SHEET 1 OF 5

REV	DATE	DESCRIPTION
00	25/05/2020	INITIAL REVISION

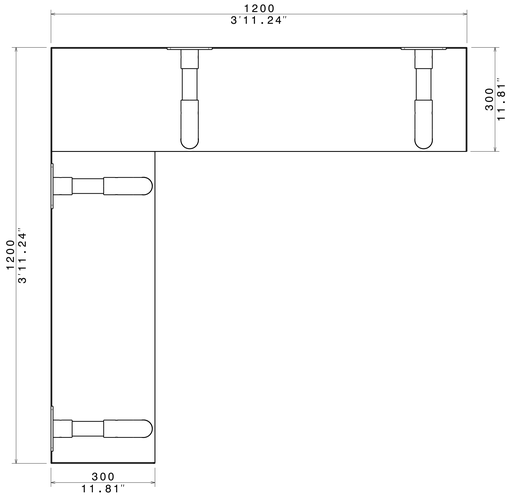

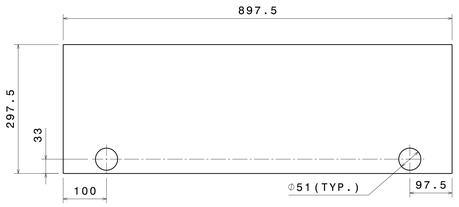

Detail (Plate 1) Item-11
(BOP)

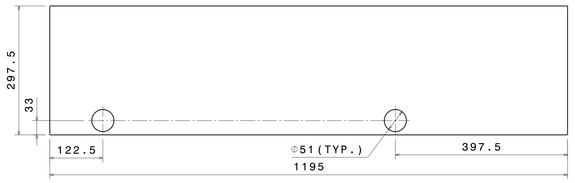

Detail (Plate) Item-10
(BOP)

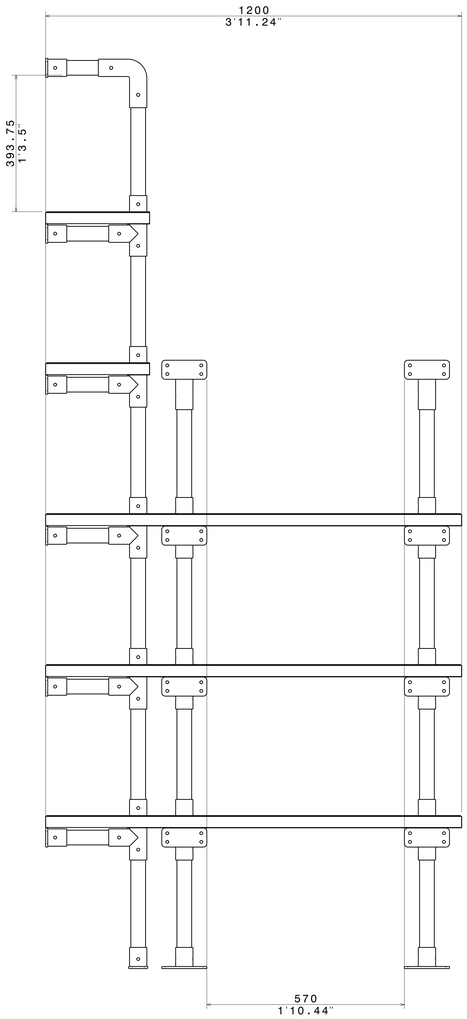

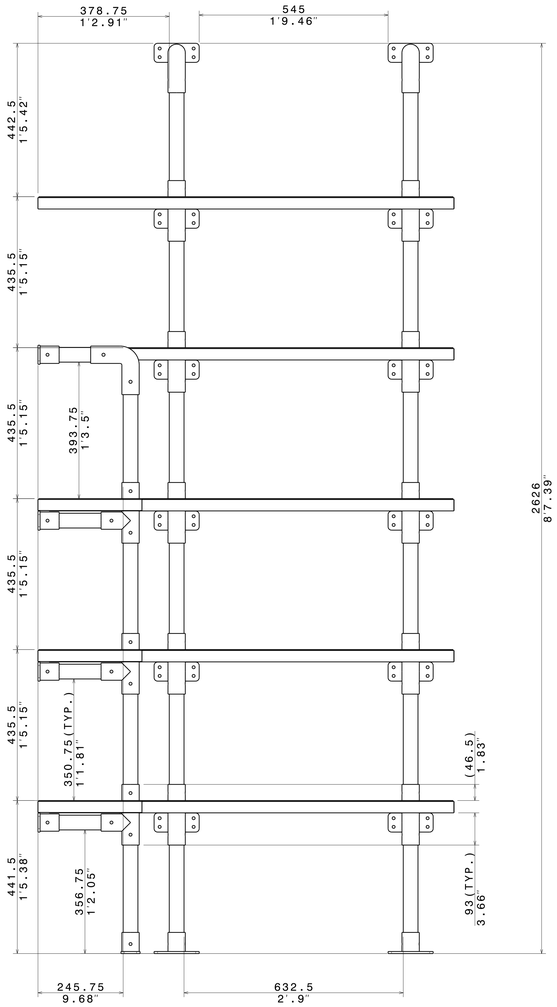

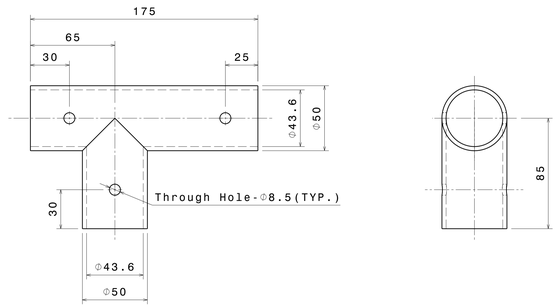

Detail (T Joint) Item-12
(BOP)

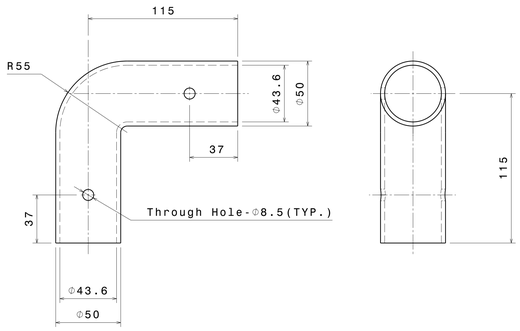

Detail (L Joint) Item-14
(BOP)

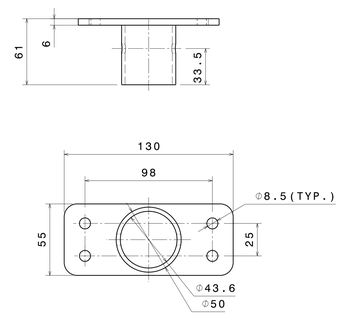

Detail (Connector Base) Item-13
(BOP)

UNLESS OTHERWISE SPECIFIED
DIMENSION ARE IN MM
VIEWS: THIRD ANGLE PROJECTION

This drawing is our property. It can't be reproduced or communicated without our written agreement.

DRAWN BY SB	DATE 25/05/2020	APL APOLLO TUBES LTD.
CHECKED BY P2P Analysis & Solutions	DATE 25/05/2020	DRAWING TITLE: SHELF
DESIGNED BY P2P Analysis & Solutions	DATE 25/05/2020	SIZE A0 · DRAWING NUMBER P2P_SHELF · REV 00
		SCALE NONE · WEIGHT(kg) XXX · SHEET 2 OF 5

REV	DATE	DESCRIPTION
00	25/05/2020	INITIAL REVISION

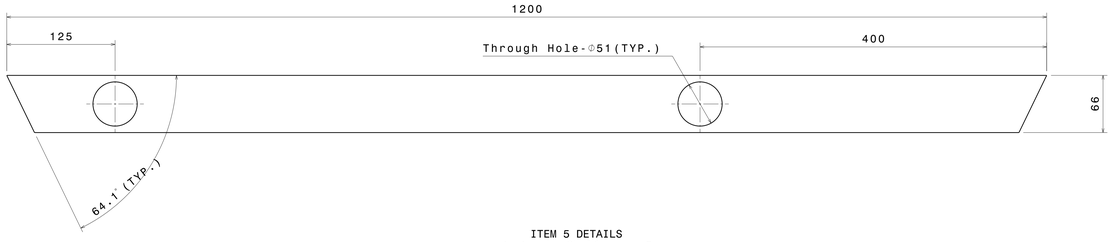

ITEM 5 DETAILS
Rect Tube Shelf Frame 5

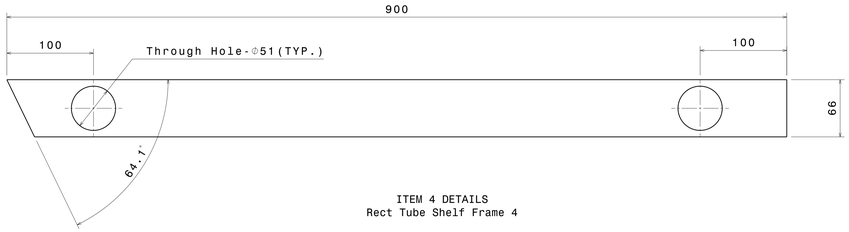

ITEM 4 DETAILS
Rect Tube Shelf Frame 4

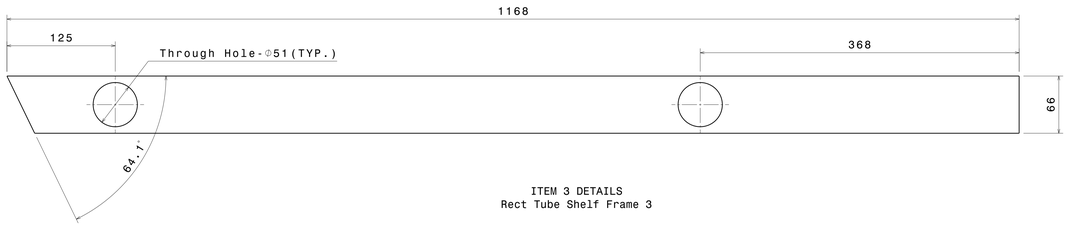

ITEM 3 DETAILS
Rect Tube Shelf Frame 3

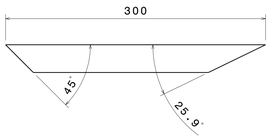

ITEM 2 DETAILS
Sq Tube Shelf Frame 2

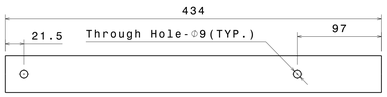

ITEM 6 DETAILS
Round Tube Shelf Frame 6

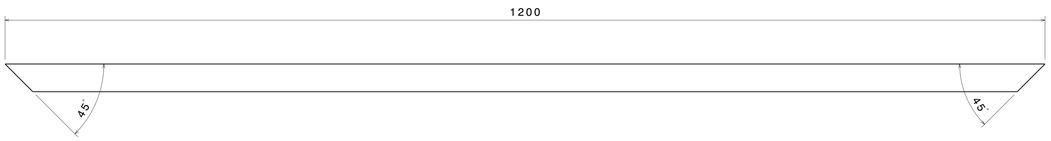

ITEM 1 DETAILS
Sq Tube Shelf Frame 1

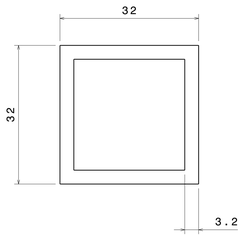

Section Detail of ITEM 1 & 2
Scale: 2:1

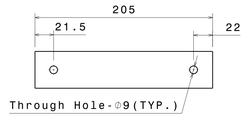

ITEM 9 DETAILS
Round Tube Shelf Frame 9

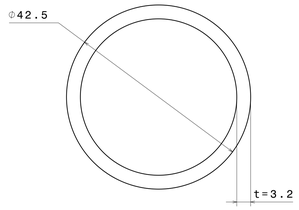

Section Detail of ITEM 6,7,8 & 9
Scale: 2:1

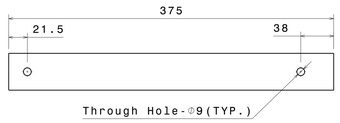

ITEM 8 DETAILS
Round Tube Shelf Frame 8

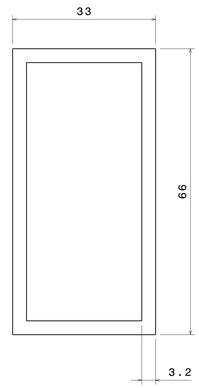

Section Detail of ITEM 3,4 & 5
Scale: 2:1

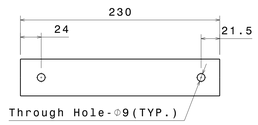

ITEM 7 DETAILS
Round Tube Shelf Frame 7

UNLESS OTHERWISE SPECIFIED
DIMENSION ARE IN MM
VIEWS: THIRD ANGLE PROJECTION

This drawing is our property. It can't be reproduced or communicated without our written agreement.

DRAWN BY SB	DATE 25/05/2020	APL APOLLO TUBES LTD.
CHECKED BY P2P Analysis & Solutions	DATE 25/05/2020	DRAWING TITLE SHELF
DESIGNED BY P2P Analysis & Solutions	DATE 25/05/2020	SIZE A0 · DRAWING NUMBER P2P_SHELF · REV 00
		SCALE NONE · WEIGHT(kg) XXX · SHEET 3 OF 5