REV	DATE	DESCRIPTION
00	22/05/2020	INITIAL REVISION

NOTES:

1. (⊥) ALL VERTICAL SUPPORTS ARE PERPENDICULAR.
2. ▱ FLATNESS OF .5MM IS APPLIED BY DEFAULT.
3. ◺ WELD BEAD OF 2MM RADIUS IS FOLLOWED.
4. ▽▽ SURFACE FINISH MEDIUM TO SMOOTH IS USED.
5. ALL TUBES ARE AS PER APL APOLLO STANDARD. CHANGES MAY EFFECT THE LOAD CAPACITY.
6. ALL HORIZONTAL AND VERTICAL TUBES ARE PERPENDICULAR TO EACH OTHER WITH ±1 DEG.
7. FINE WELDNG IS REQUIRED AS PER MENTIONED DETAILS AND FINISHING.
8. HIGHER CURRENT WELDING MAY AFFECT THE BRITTLENESS OF MATERIAL WHICH LATER MAY RAISE TO WEAKENING OF STRUCTURE.
9. FABRICATORS ARE ALLOWED TO USE FITTINGS/FRAMES/SUPPORTS AS NEEDED AND THE SAME MUST BE COMMUNICATED BACK TO ENGINEERING TEAM.
10. LENGTH OF ALL LONGITUDINAL FRAMES ARE FOR REFERENCE ONLY AND SUBJECTED TO CHANGE PER REQUIREMENT.

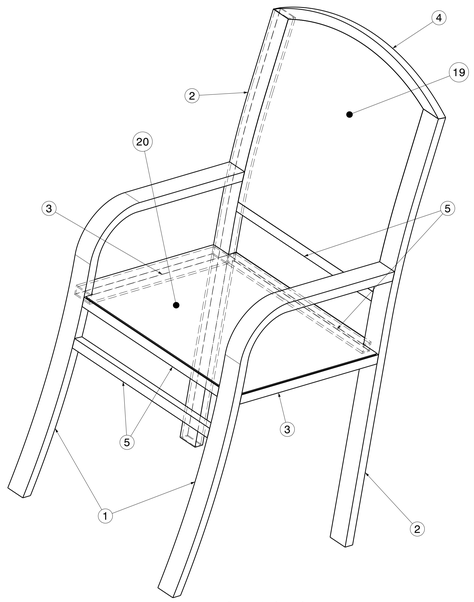

Isometric view
Chair-1

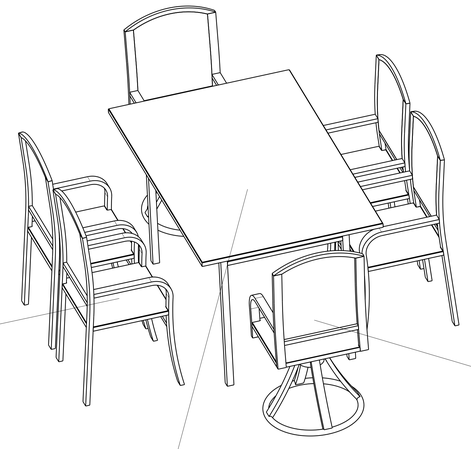

Isometric view
Scale: 2:25

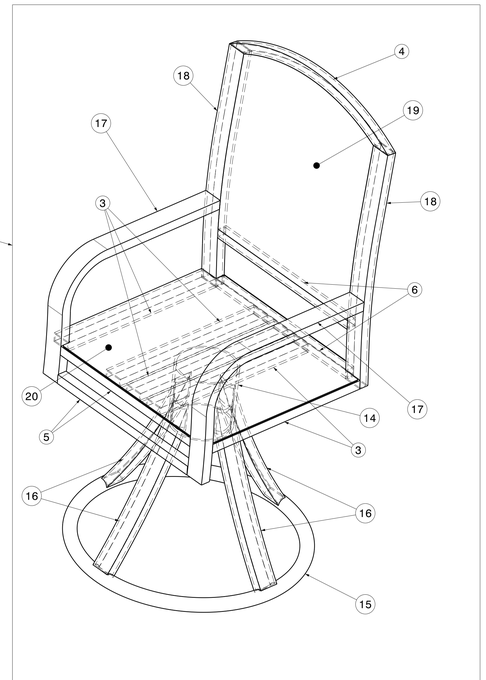

Isometric view
Chair-2

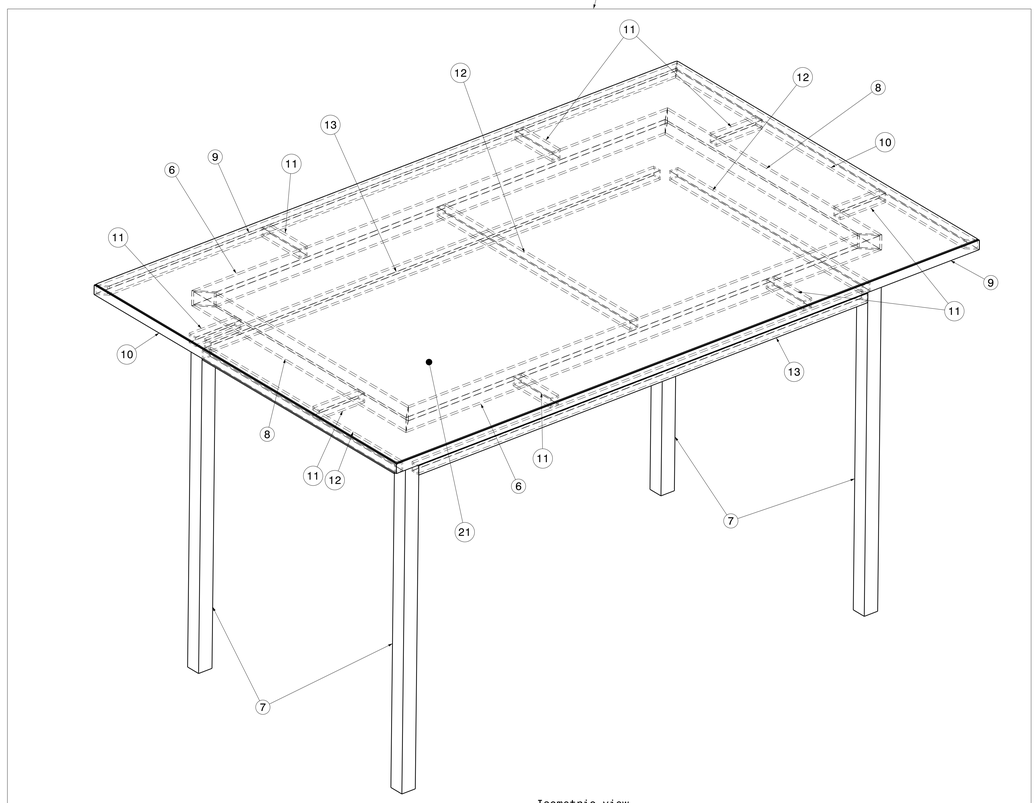

Isometric view
Table

ITEM NO.	PART NUMBER	DESCRIPTION	QTY.	Wt(Kg)/Each
21	Plate 2-BOP	1735 X 1095 , T=2.5	1	37.3
20	Plate 1-BOP	545 X 503 , T=2.5	6	5.3
19	Plate-BOP	538 X 450 , T=2.5	6	4.6
18	Rect Tube Chair & Table Frame 18	50 X 25 X 3.2 X 653	4	2.2
17	Rect Tube Chair & Table Frame 17	50 X 25 X 3.2 X 733	4	2.5
16	Rect Tube Chair & Table Frame 16	50 X 25 X 3.2 X 450	8	1.4
15	round_tube Chair & Table Frame 15	33.8 X 4 X 1728	2	5.1
14	round_tube Chair & Table Frame 14	152.4 X 5.4 X 160	2	3.1
13	Sq Tube Chair & Table Frame 13	25 X 25 X 3.2 X 1340	2	2.9
12	Sq Tube Chair & Table Frame 12	25 X 25 X 3.2 X 700	3	1.5
11	Sq Tube Chair & Table Frame 11	25 X 25 X 3.2 X 135	8	0.3
10	Sq Tube Chair & Table Frame 10	25 X 25 X 3.2 X 1100	2	2.4
9	Sq Tube Chair & Table Frame 9	25 X 25 X 3.2 X 1740	2	3.8
8	Sq Tube Chair & Table Frame 8	40 X 40 X 3.2 X 780	2	2.7
7	Sq Tube Chair & Table Frame 7	40 X 40 X 3.2 X 950	4	3.5
6	Sq Tube Chair & Table Frame 6	40 X 40 X 3.2 X 1420	2	5.1
5	Sq Tube Chair & Table Frame 5	25 X 25 X 3.2 X 450	24	1.0
4	Sq Tube Chair & Table Frame 4	25 X 25 X 3.2 X 580	6	1.1
3	Rect Tube Chair & Table Frame 3	50 X 25 X 3.2 X 460	18	1.6
2	Rect Tube Chair & Table Frame 2	50 X 25 X 3.2 X 1156	8	3.9
1	Rect Tube Chair & Table Frame 1	50 X 25 X 3.2 X 1175	8	4.0

This drawing is our property. It can't be reproduced or communicated without our written agreement.

APL APOLLO TUBES LTD.

DRAWING TITLE: CHAIR & TABLE

DRAWN BY: SB	DATE: 22/05/2020	
CHECKED BY: P2P Analysis & Solutions	DATE: 22/05/2020	
DESIGNED BY: P2P Analysis & Solutions	DATE: 22/05/2020	

UNLESS OTHERWISE SPECIFIED
DIMENSION ARE IN MM
VIEWS: THIRD ANGLE PROJECTION

SIZE	DRAWING NUMBER	REV
A0	P2P_CHAIR & TABLE	00

SCALE: As Indicated | WEIGHT(kg): 0kg | SHEET 1 OF 5

REV	DATE	DESCRIPTION
00	22/05/2020	INITIAL REVISION

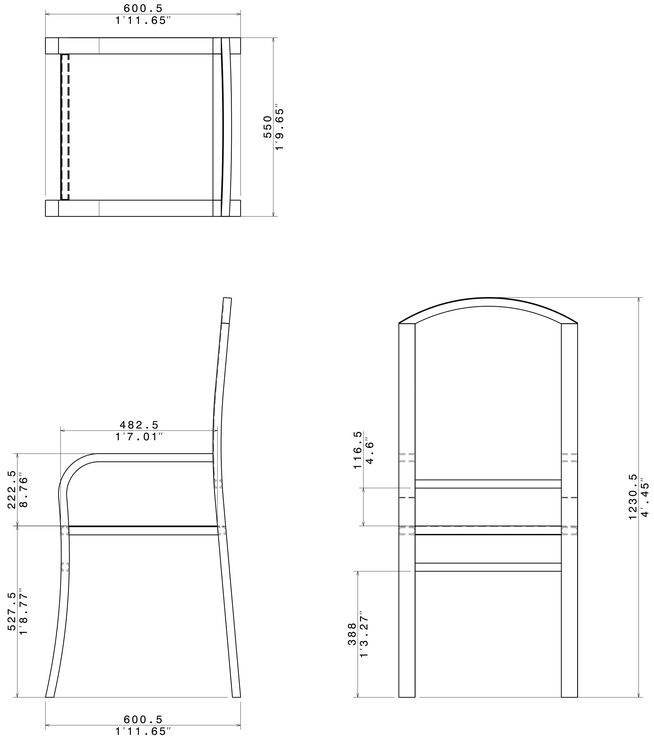

Chair 1

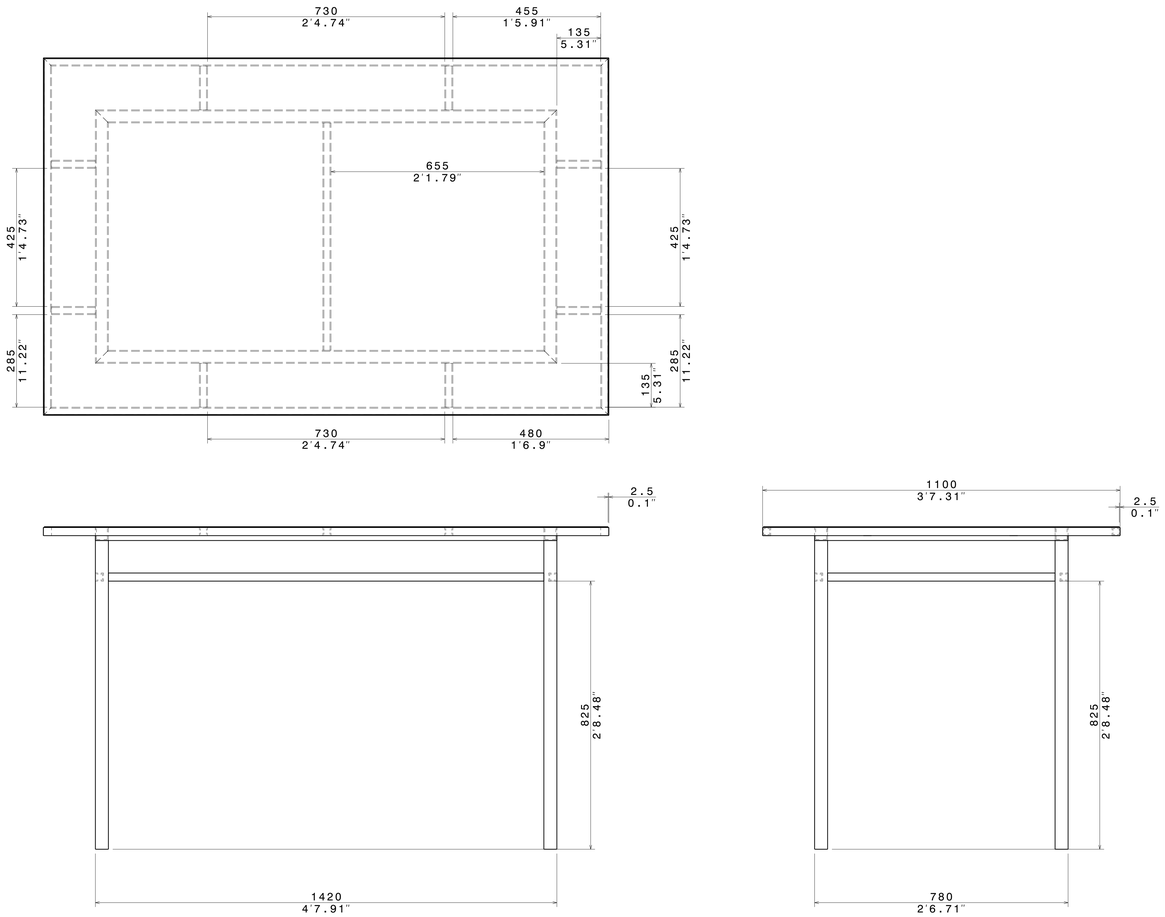

Table

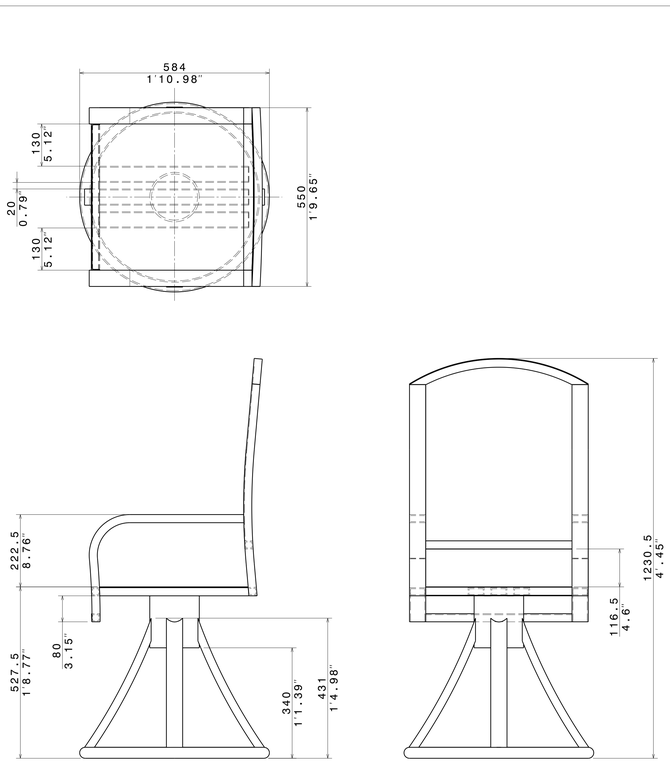

Chair 2

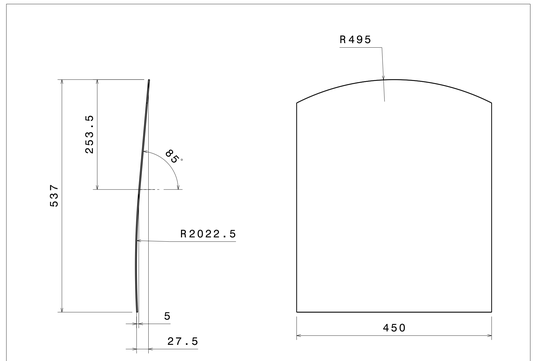

Detail (Plate) Item-19
(BOP)

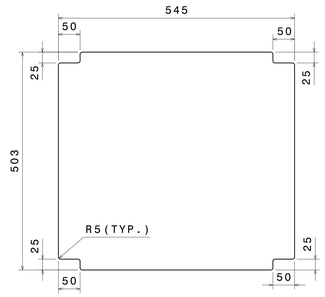

Detail (Plate 1) Item-20
(BOP)

UNLESS OTHERWISE SPECIFIED
DIMENSION ARE IN MM
VIEWS: THIRD ANGLE PROJECTION

This drawing is our property. It can't be reproduced or communicated without our written agreement.

DRAWN BY SB	DATE 22/05/2020	
CHECKED BY P2P Analysis & Solutions	DATE 22/05/2020	
DESIGNED BY P2P Analysis & Solutions	DATE 22/05/2020	

APL APOLLO TUBES LTD.

DRAWING TITLE
CHAIR & TABLE

SIZE	DRAWING NUMBER	REV
A0	P2P_CHAIR & TABLE	00

SCALE NONE | WEIGHT(kg) XXX | SHEET 2 OF 5

REV	DATE	DESCRIPTION
00	22/05/2020	INITIAL REVISION

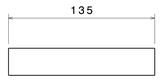

ITEM 11 DETAILS
Sq Tube Chair & Table Frame 11

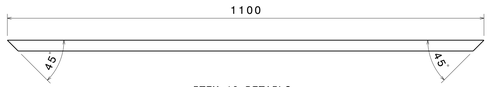

ITEM 10 DETAILS
Sq Tube Chair & Table Frame 10

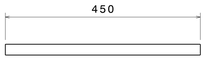

ITEM 5 DETAILS
Sq Tube Chair & Table Frame 5

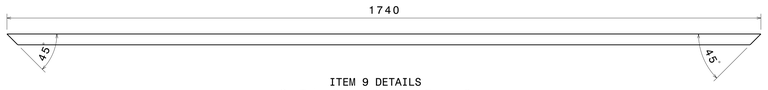

ITEM 9 DETAILS
Sq Tube Chair & Table Frame 9

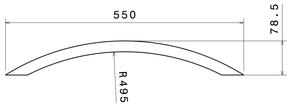

ITEM 4 DETAILS
Sq Tube Chair & Table Frame 4

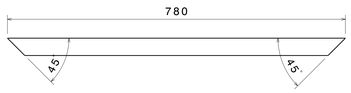

ITEM 8 DETAILS
Sq Tube Chair & Table Frame 8

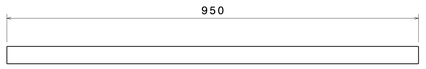

ITEM 7 DETAILS
Sq Tube Chair & Table Frame 7

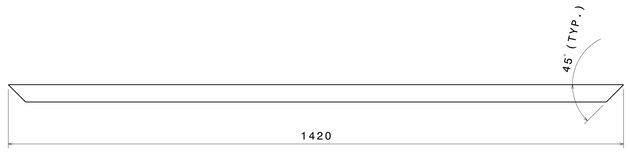

ITEM 6 DETAILS
Sq Tube Chair & Table Frame 6

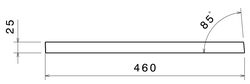

ITEM 3 DETAILS
Rect Tube Chair & Table Frame 3

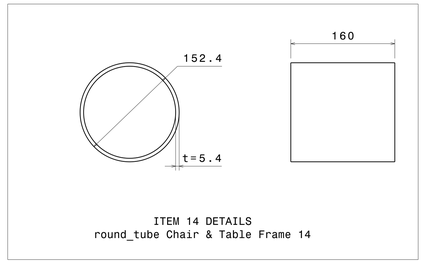

ITEM 14 DETAILS
round_tube Chair & Table Frame 14

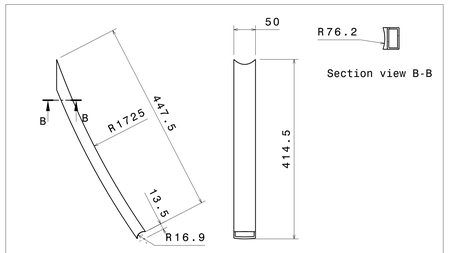

ITEM 16 DETAILS
Rect Tube Chair & Table Frame 16

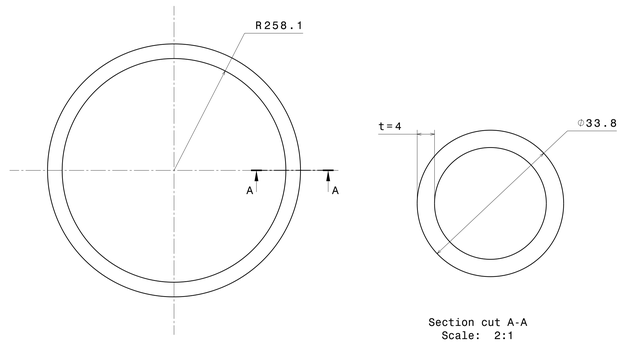

ITEM 15 DETAILS
round_tube Chair & Table Frame 15

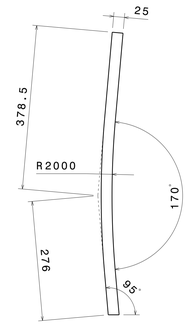

ITEM 18 DETAILS
Rect Tube Chair & Table Frame 18

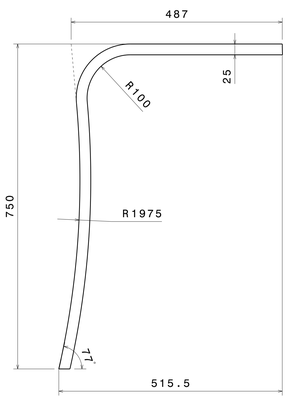

ITEM 1 DETAILS
Rect Tube Chair & Table Frame 1

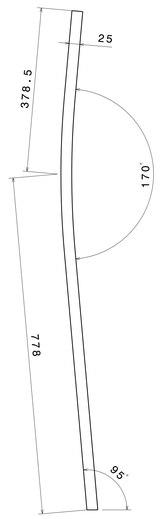

ITEM 2 DETAILS
Rect Tube Chair & Table Frame 2

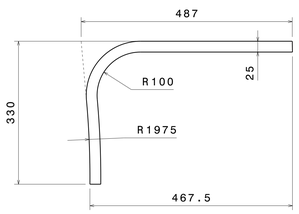

ITEM 17 DETAILS
Rect Tube Chair & Table Frame 17

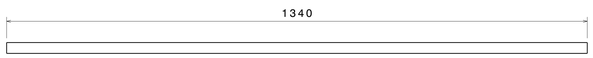

ITEM 13 DETAILS
Sq Tube Chair & Table Frame 13

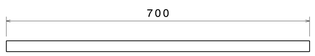

ITEM 12 DETAILS
Sq Tube Chair & Table Frame 12

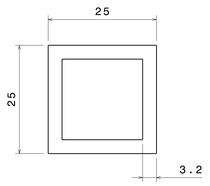

Section Detail of ITEM 4,5,9,10,11,12 & 13
Scale: 2:1

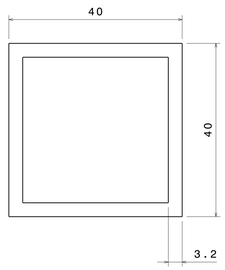

Section Detail of ITEM 6,7 & 8
Scale: 2:1

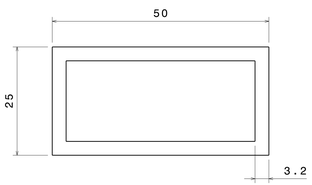

Section Detail of ITEM 1,2,3,16,17 & 18
Scale: 2:1

UNLESS OTHERWISE SPECIFIED
DIMENSION ARE IN MM
VIEWS: THIRD ANGLE PROJECTION

This drawing is our property. It can't be reproduced or communicated without our written agreement.

DRAWN BY SB	DATE 22/05/2020	APL APOLLO TUBES LTD.
CHECKED BY P2P Analysis & Solutions	DATE 22/05/2020	DRAWING TITLE: CHAIR & TABLE
DESIGNED BY P2P Analysis & Solutions	DATE 22/05/2020	SIZE A0 · DRAWING NUMBER P2P_CHAIR & TABLE · REV 00
		SCALE NONE · WEIGHT(kg) XXX · SHEET 3 OF 5